Title: Powertrain Mounting Overview

GLSV Capabilities Presentation

Author: Steve Tarnowski, Steve Mattson

Date: 9 February 2016

Job Number:

906.482.7535 www.glsv.com

Proprietary Notice

- **PROPRIETARY WARNING**

All data, illustrations, photos, and information contained in this presentation and communication is considered proprietary to Great Lakes Sound & Vibration Inc (Hereafter GLSV). Information contained herein shall be held in strict confidence. Furthermore, it shall not be distributed or disseminated to any third parties without written consent from GLSV.

Isolation System: Fundamental Requirements

- Locate and support powertrain mass
- React external and internal forces without interference
- Isolate external and internal forces
- Must perform under severe conditions and provide fail safe
- Manufacturability
- Robustness
- Assembly/maintainability
- Weight and cost must meet program objectives

Defense-Specific Engine Mounting Challenges

- Power Dense Engine = Higher Forces reacted through less mass
- Tight deflection envelope
- Limited freedom/flexibility for isolator placement
- Substantial mobility, transportation and shock requirements
- Structural rigidity?
- Hardware delivery while design is still in-flux
- Aggressive exterior acoustic requirement, interior must be inhabitable.

GLSV Powertrain Mounting Design Process

Program **constraints** and **goals** (max. displacements, loads, packaging, frequencies, coupling)

Mount System Analysis - Rigid Body Mode Coupling and Placement, Static Displacements and Rotations

Loop Until Goals are Achieved With "Real Rates"

Mount Design Analysis Model and FEA (design to target nominal and nonlinear stiffness and obtain actual rates).

Compare to Program Goals

Mount Stiffness Specifications - Purely Analytical (Nominal and Non-linear target stiffness)

Re-Enter Design Loop If Required

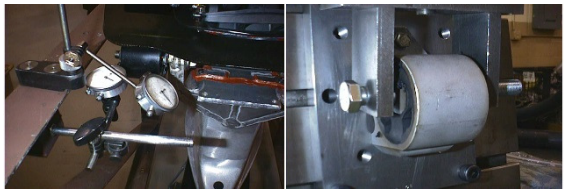

Durability and Verification Testing

Build Prototype

Generic Solid Model

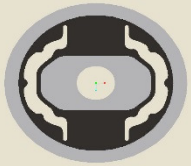

Integrated Solid Model

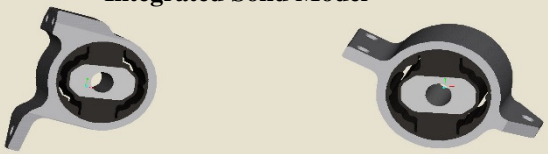

906.482.7535 www.glsv.com

GLSV Powertrain Mounting Design Process

1. **Define the Problem**
   - **Understand Engine Configuration**
     - **Forces**
     - **Mounting Interfaces**
   - **Understand Integration Limitations**
     - **Packaging Challenges**
     - **Structure**
     - **Envelope (Sway Space)**
   - **Define Isolation Objectives**
     - **Frequency of Modes**
     - **Decoupling**
2. **Design and Optimize System**
   - **Locate mounts**
   - **Define isolation region stiffness**
   - **Develop motion control profiles**
   - **Design isolator**
3. **Iteration**
   - **Isolation objectives**
   - **Mounts' rates realistic**
   - **Operating in isolation region**
   - **Ability to control motion**
4. **Bracket Design**
   - **Packaging**
   - **Stiffness**
   - **Fatigue**
   - **Avoid Resonance**
   - **Interfaces**
5. **Build, Test, Tune**
   - **Library of Mounts (Durometer)**

Example #1 - Technical Design Objectives

	XX	YY	ZZ	X	Y	Z
Frequency (Hz)	~6	~16	6<X<16	<16	<16	<16
% Uncoupled	95%	95%	95%	95%	95%	95%

Forces to Avoid ***- 1st Order Rotating Couple (30 Hz at 1800 RPM)***
- **2nd Order Pitch Couple** (60 Hz at 1800 RPM)
-**2.5 Order Torque Pulse** (75 Hz at 1800 RPM)

½" clearance in all dimensions – control must avoid wall collision under all loading conditions.

Example #2 – System Level Design Iteration

Engine Initial Design Conditions: Normal Mode and Modal Purity

Mode #	Normal Mode Frequency (Hz)	Modal Purity (%)						
		Lateral (X)	Fore/Aft (Y)	Bounce (Z)	Pitch (XX)	Roll (YY)	Yaw (ZZ)	Total
1	6.138	**69.64**	1.83	0.44	1.67	24.99	1.43	100
2	6.305	6.70	32.98	19.41	**38.63**	2.16	0.12	100
3	8.965	0.20	21.15	**69.74**	8.89	0.00	0.01	100
4	13.576	22.67	0.01	0.07	0.00	**72.63**	4.62	100
5	20.394	0.93	2.15	2.22	1.18	0.08	**93.43**	100
6	21.01	0.04	**58.78**	1.65	33.57	0.13	5.83	100

Results from rigid-body modal analysis (with flexible mounts) using Altair MotionSolve multi-body dynamics software

Modal Purity Chart for Initial Design Conditions

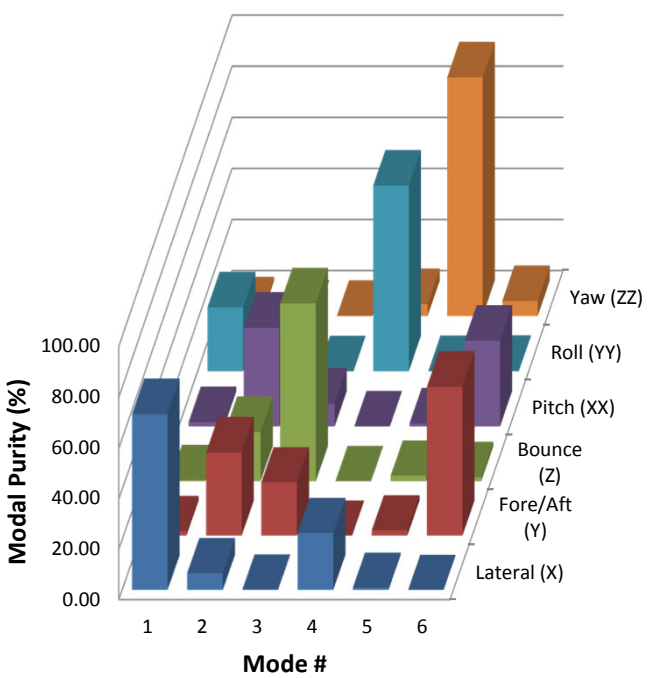

906.482.7535 www.glsv.com

Example #3 – Simulated Modal Analysis

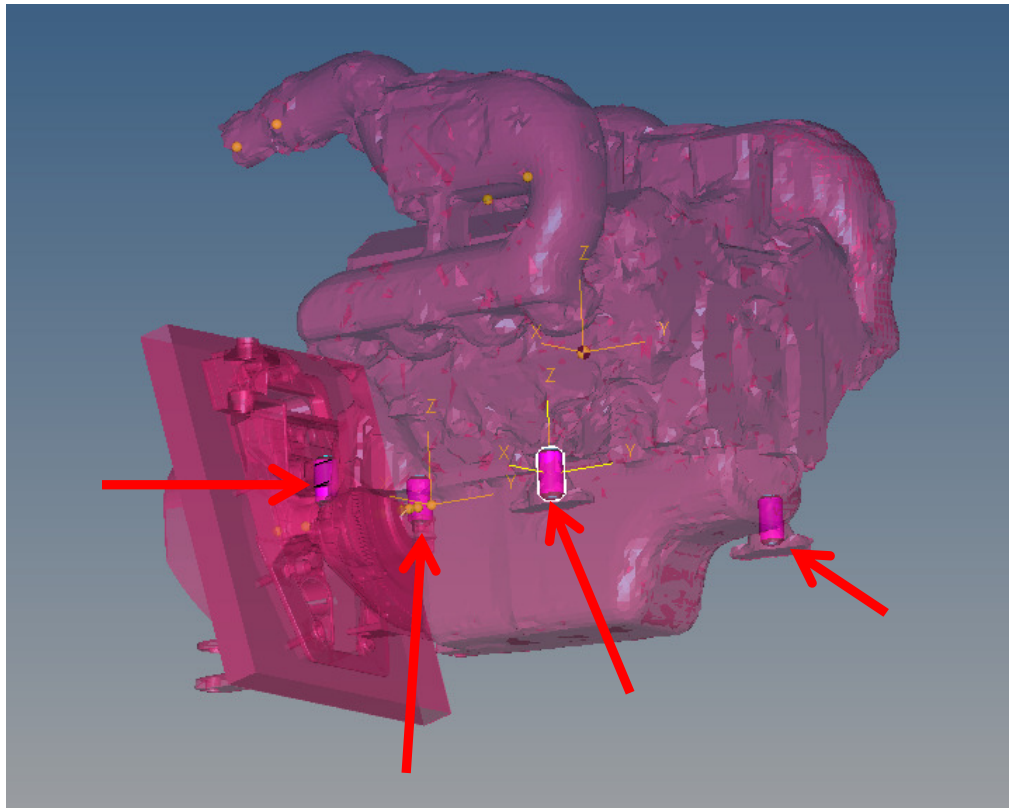

- Modes are simulated based on engine CG, MOI, mount stiffness data.
- Simulated by MotionSolve multi-body dynamics model

Example #3 – Simulated Modal Analysis Correlated to Test Data

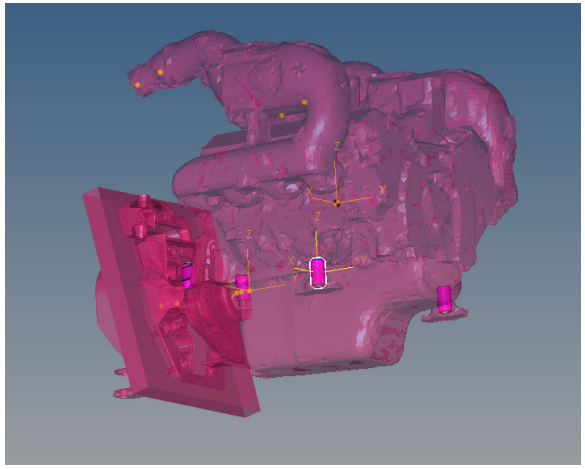

Baseline MBD Model

MBD Simulation Data closely follows Modal Test data.

Mode	Modal Test (Hz)	*MBD Model* ***Nominal*** ***Mount Stiffness*** *(Hz)*	*% Error*	MBD Model **Modified** **Mount Stiffness** (Hz)	*% Error*
1	9.1	6.52	-28.3	9.54	4.9
2	10.6	6.83	-35.8	10.98	3.2
3	15.9	9.6	-39.8	16.03	0.6
4	17.3	13.1	-24.3	17.97	3.9
5	26.3	15.79	-39.9	24.97	-5.0
6	31.7	19.17	-39.5	31.06	-1.9

Excellent correlation

Example #3 – Simulated Modal Analysis Correlated to Test Data

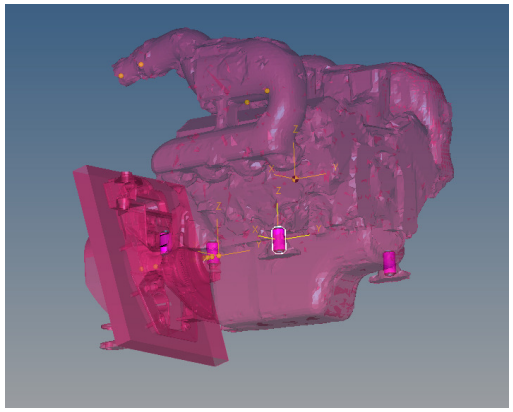

Mode	1	2	3	4
Mode shape from Test	**Lateral, Yaw, Roll**	**Fore-Aft, Pitch**	**Vertical**	**Lateral, Yaw, Roll**
Simulated Mode Shape	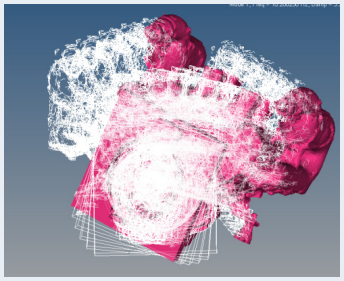	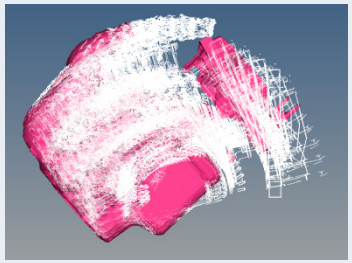	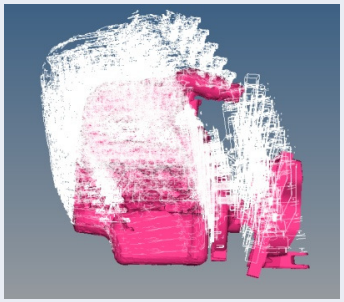	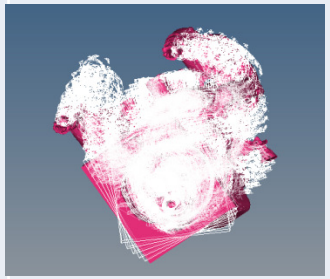

Example #4 - Isolation Performance

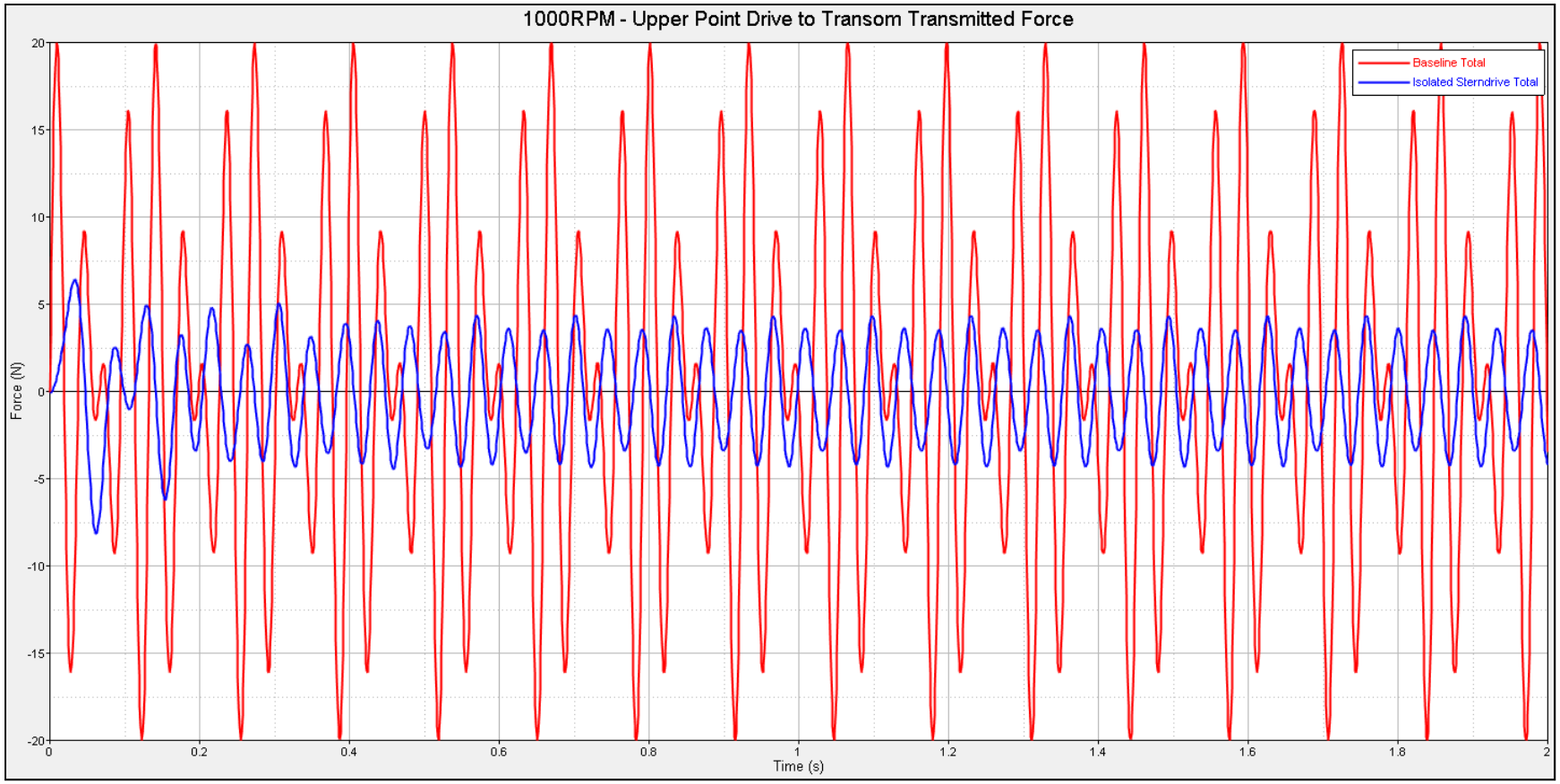

Baseline RMS = 10.294 N
Isolated RMS = 2.888 N

Example #4 – Transient Load Motion Control

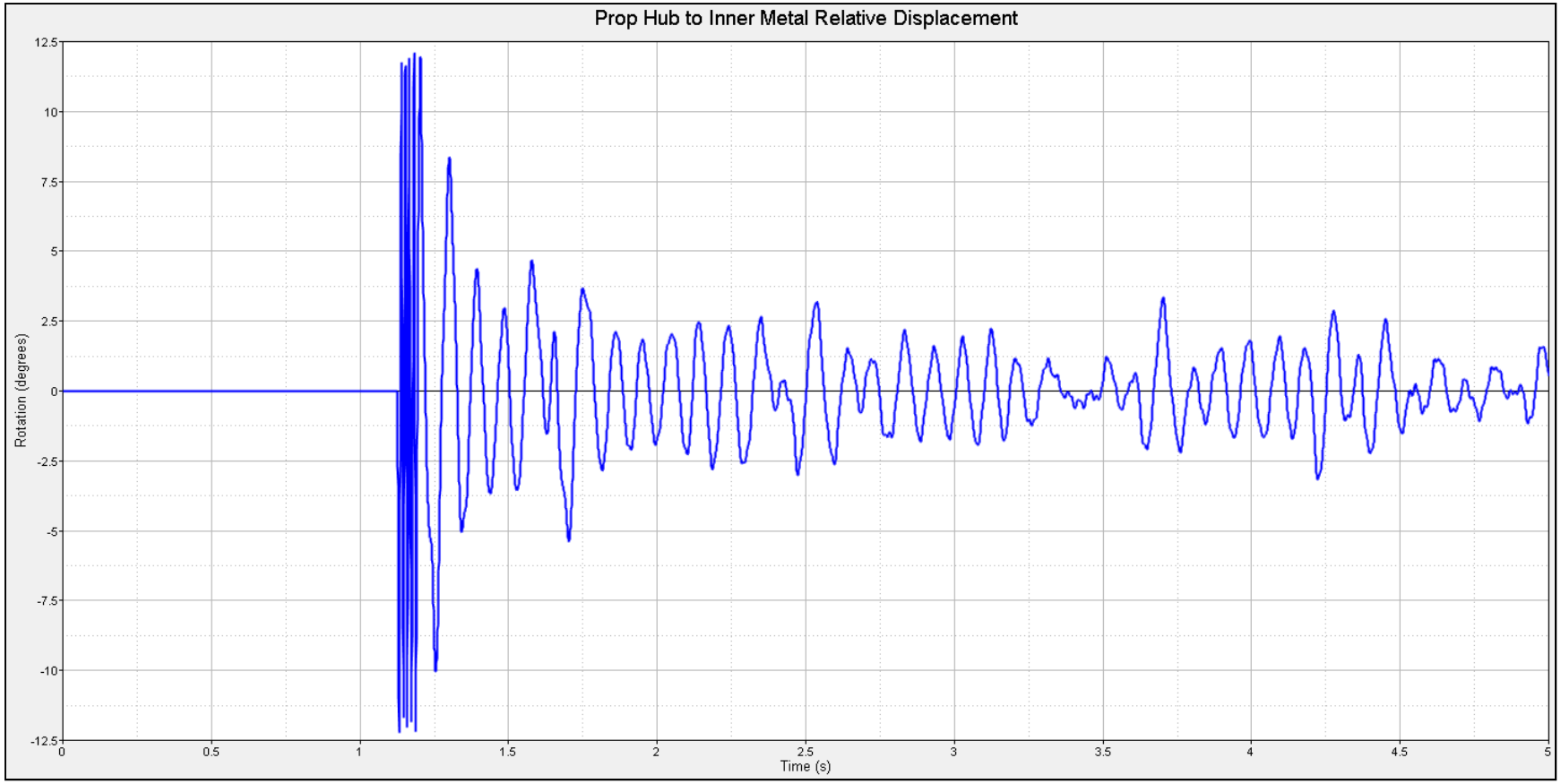

Max Rotation: 12 Deg.

Example #5 – Powertrain MBD model

MotionSolve model

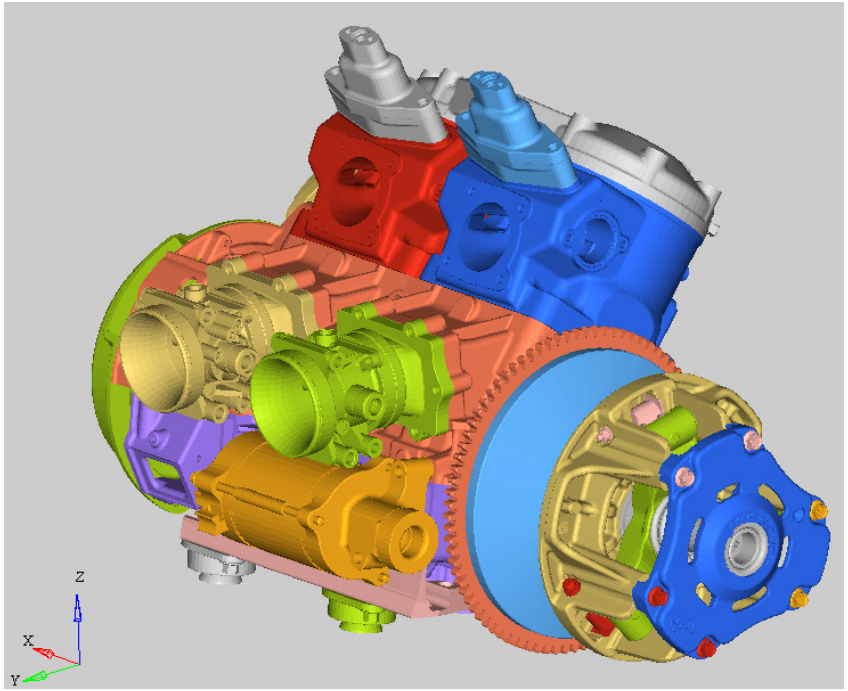

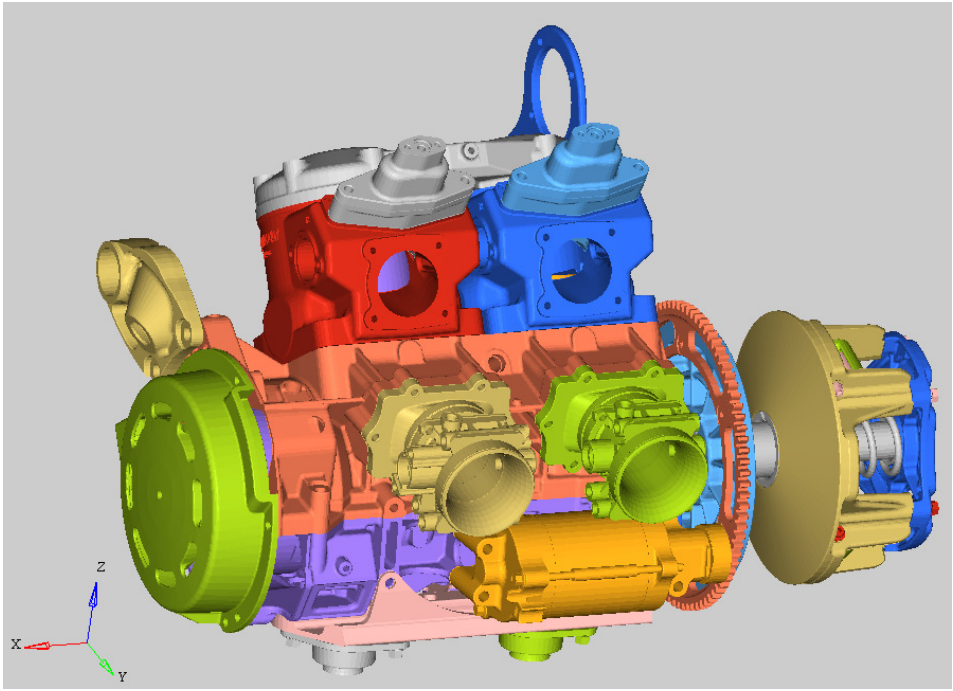

System Optimization

GLSV uses Altair HyperStudy software for design exploration and optimization of mechanical systems.

- Perform Design of Experiments (DOE) to understand the relationship between design variables and overall system performance.
- Stochastic studies to assess reliability and robustness of designs
- Parameterize analysis models for design sensitivity studies
- Shape parameter definition using morphing technology
- Motion studies
- NVH studies

Example #6: Optimization of powertrain mount system

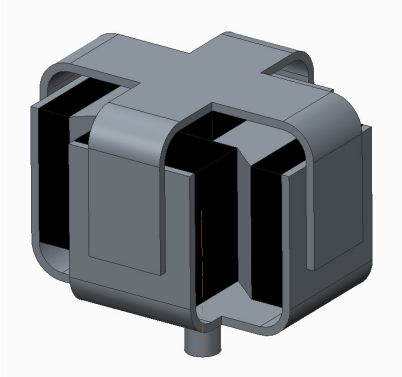

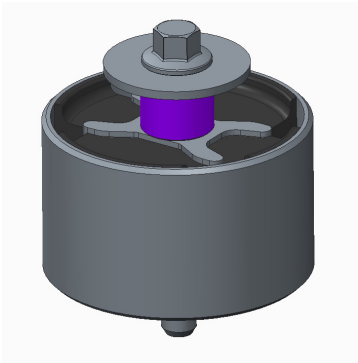

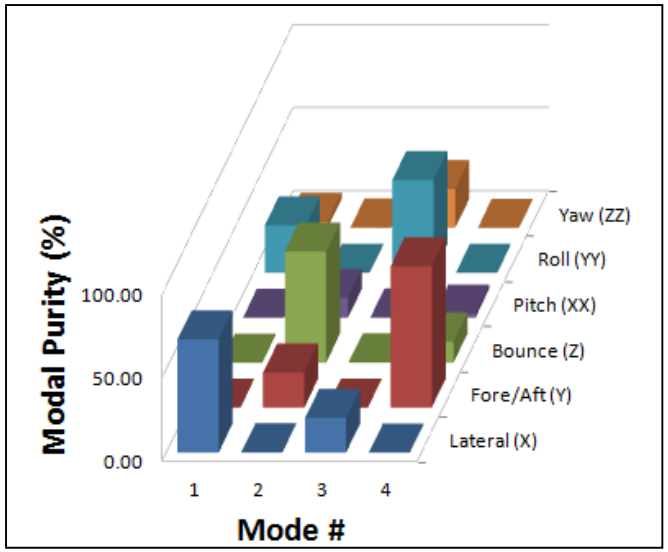

Optimize for NVH performance (decoupled, "pure" modes)

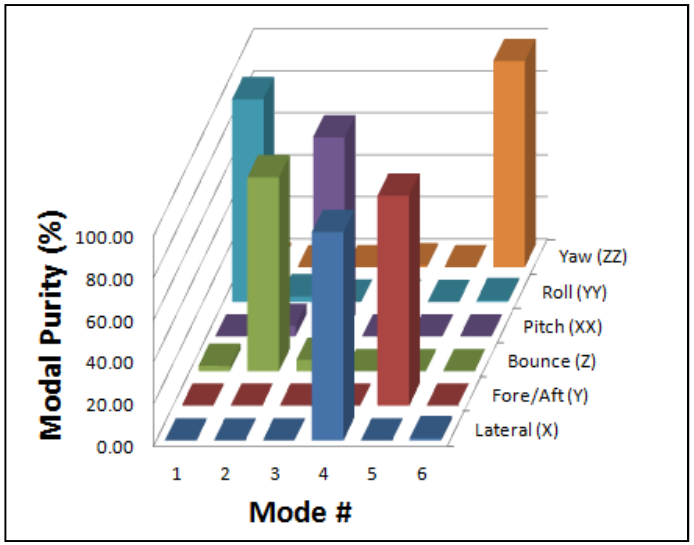

Example #7 – DOE and Optimization of Mount System Design

Percent Uncoupled and Frequency Results

Optimization Run	Roll Purity (%)	Roll Freq. (Hz)	Fore/Aft Purity (%)	Fore/Aft Freq. (Hz)	Bounce Purity (%)	Bounce Freq. (Hz)
#1	94.0	11.61	56.5		87.3	
#2	94.3	10.86				
#3	98.4	12.5	74.2	18.7	97.5	10.4
#4	90.6	12.9	74.5	24.6	49.8	6.5
#5	90.7	6.9	77.8	27.7	87.7	12.8
#6	97.5	14.4	77.6	25.1	76.6	11.2
GOAL:	>95	<=13	>85	>25	>85	>25

Example #8– Custom Mount Design

GLSV designed mount using strain-based fatigue life prediction.
Rubber durability life verified on test stand > 50,000 cycles

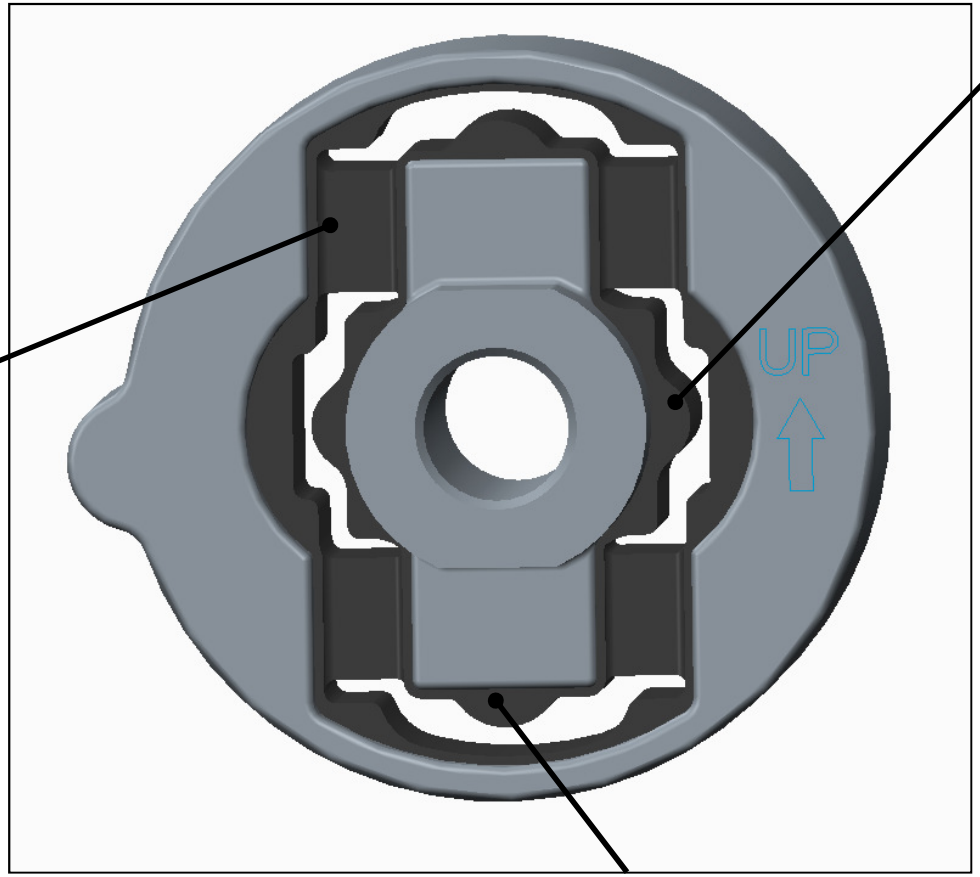

Primary Fore/Aft Pads (x4)

Secondary Fore/Aft Bump Stops (x2)

Secondary Vertical Bump Stops (x2)

Custom Isolation Systems

GLSV has the unique ability to fabricate prototype and low production volumes of elastomeric components for custom isolation systems and bump stops. Our 100-ton transfer molding press can produce components of varying elastomeric materials and durometers.

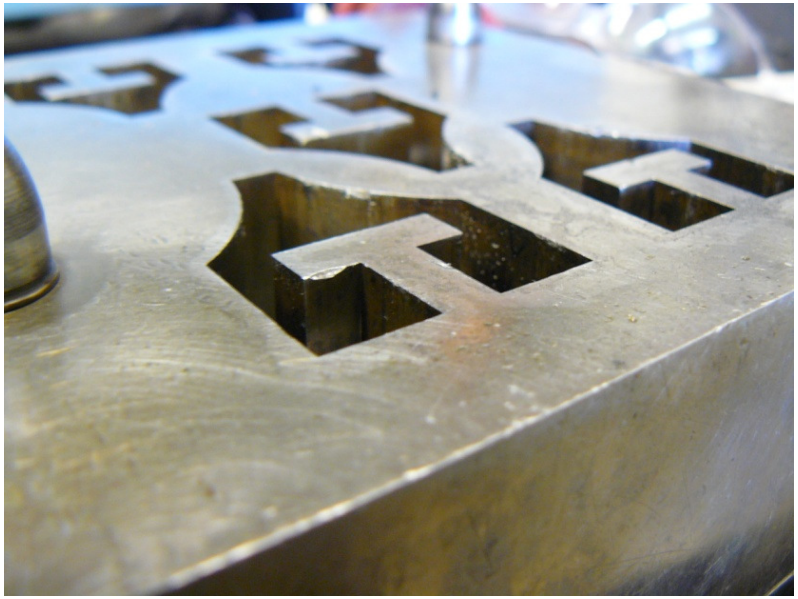

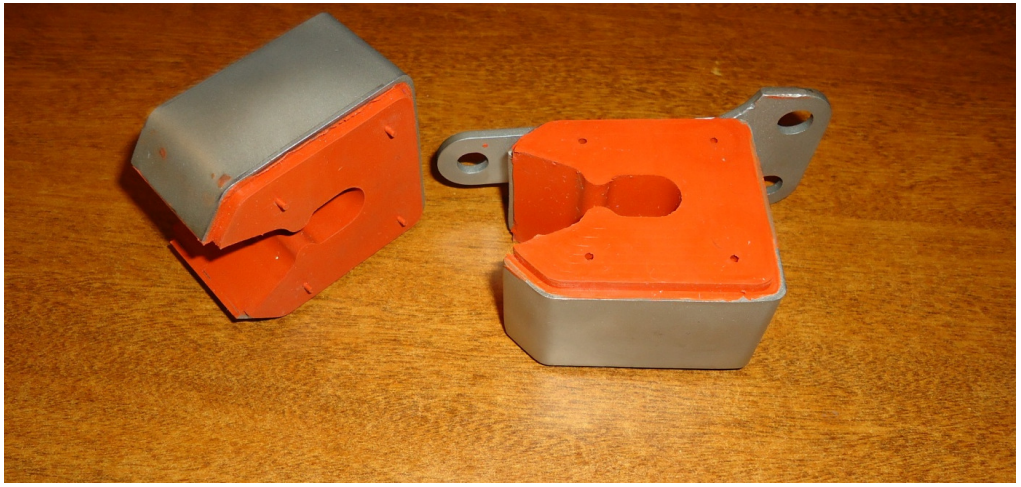

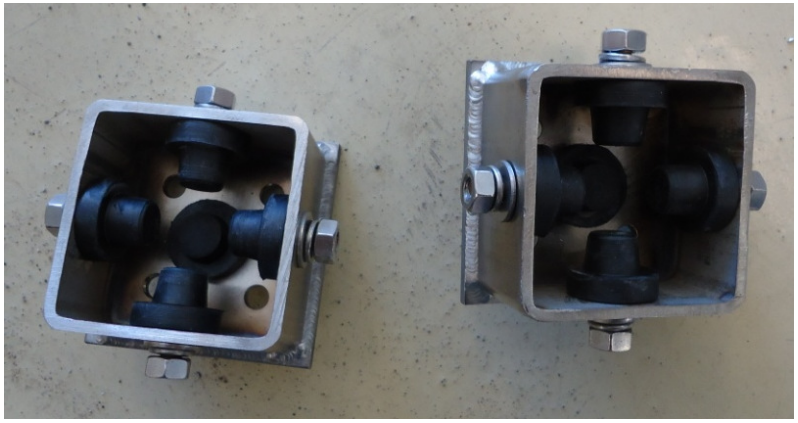

GLSV Manufacturing

- In-house Mold design
  - multi-cavity molds
  - transfer molding
  - direct temperature measurement in the mold
  - use of bonding agents
  - design of internal (metallic) bonded components
- Mold materials
  - Tool steel; carbon steel (for low production volumes)
  - Designed and CNC-machined in house
- Typical elastomers
  - EPDM (30, 40, 50 Durometer)
  - Natural Rubber (30 – 80 Durometer)
  - Silicone for high temperature applications
- Processing considerations (PLC control)
  - time stamped data measurement
  - real time process controls (pressure, temperatures)
  - Q/A checks of durometer, curing, bonding
- GLSV works with GoldKey Processing (subsidiary of HEXPOL Compounding)
  - rubber compounder
  - PhD chemists on staff

GLSV Manufacturing – rubber molding

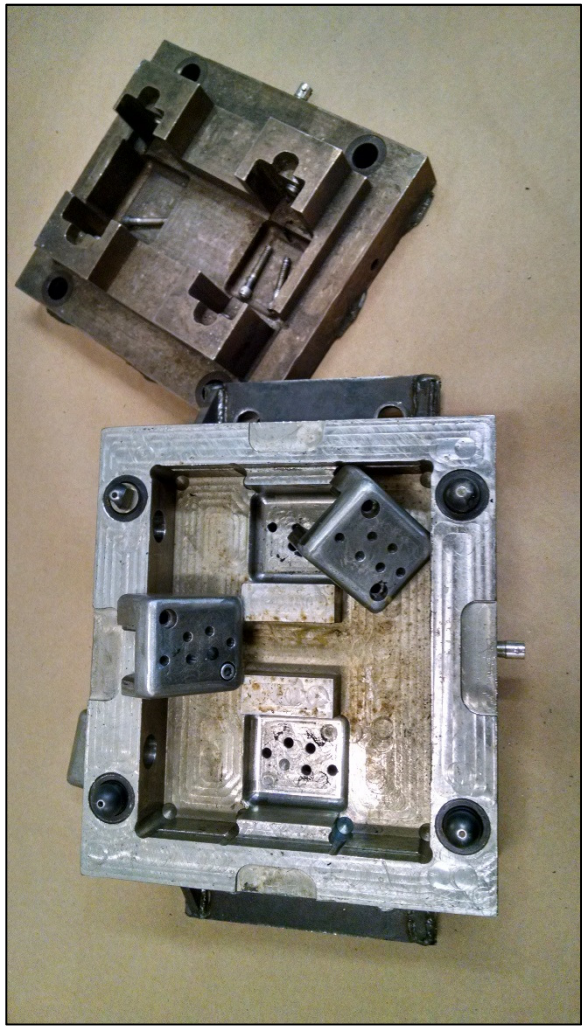

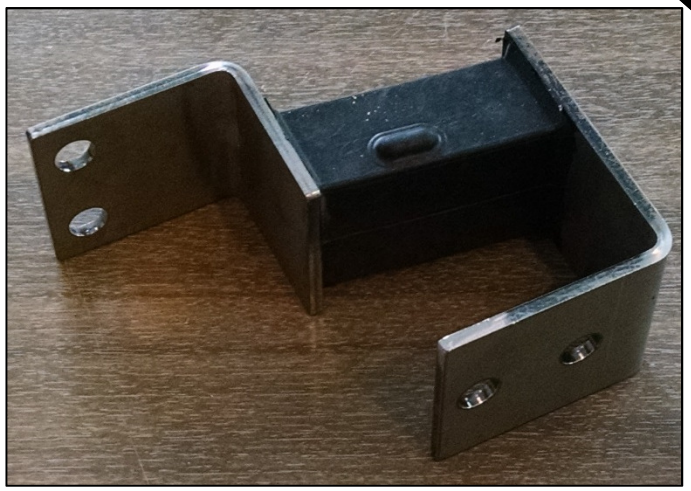

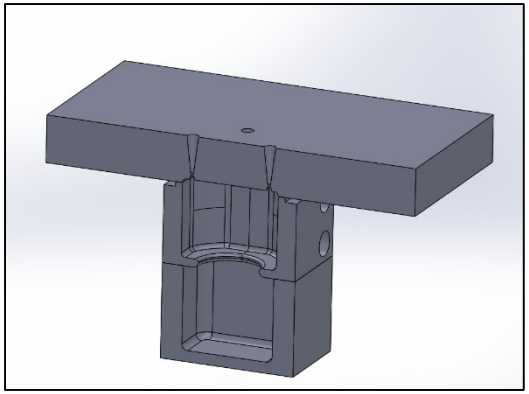

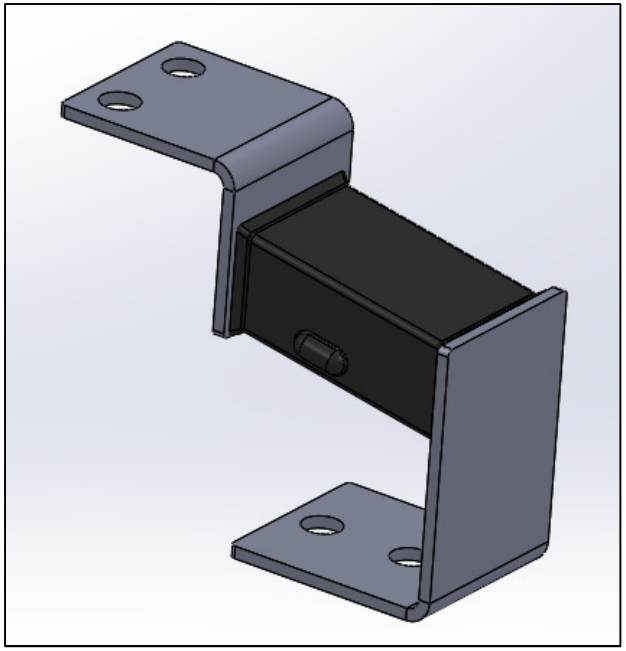

906.482.7535 www.glsv.com

GLSV Performance and durability testing

Power and torque curves form 10 to 1000 + HP including extended durability runs and root cause identification of noise, vibration, and durability issues.

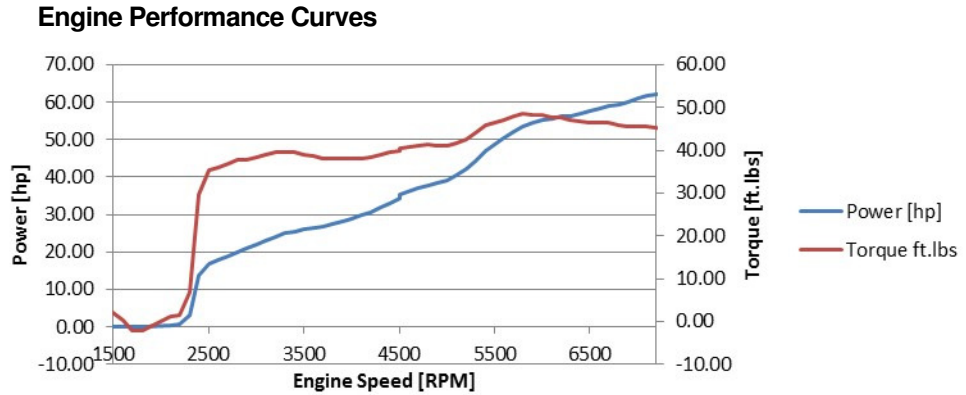

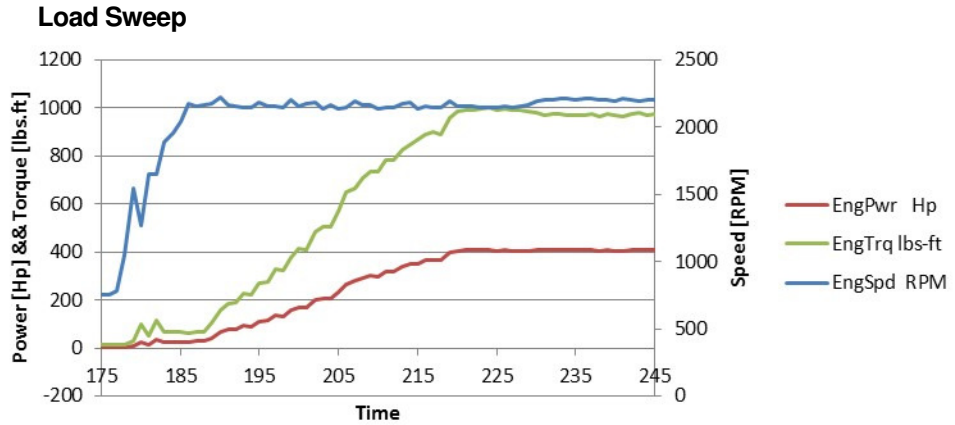

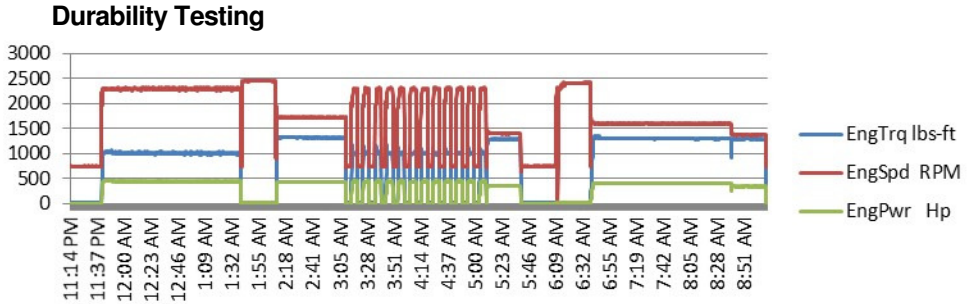

906.482.7535 www.glsv.com

GLSV Engine Dynamometer/Hemi-Anechoic Chamber

- 11’ x 28’ Hemi-anechoic chamber exhaust extraction, air exchange, and closed loop coolant systems.
- Large water brake (Taylor)
- Small water brake (L&S)
- Small Eddy Current
- Medium Eddy Current
- Land and Sea control
- Super flow control with data acquisition

906.482.7535 www.glsv.com

GLSV Dynamometer Specs

DX34 Water Brake Dynamometer

Specifications

Power: 1,000 hp (746 kW)
Torque: 3,217 ft-lb (4,361 N)
Speed: 4,000 rpm
Water Use: 73 gpm (4.6 lps) (No Cooling System)
Inertia Value with Companion Flange or Torsional Coupling: 82 ft-lb^2
Shipping Weight: 1,846 lb (837 kg)

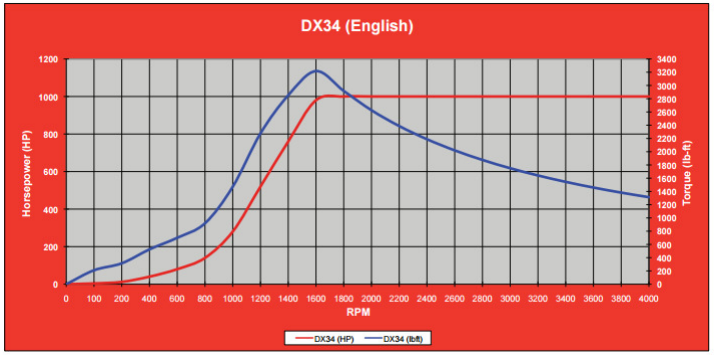

DYNOmite 9" Water Brake

Horsepower from 15 to 300+
Torque options from 5 to over 200 lb-ft
RPM from 1,000 to over 12,000 (standard) – optional absorbers to over 30,000
Higher-capacity Siamese rotor and larger-diameter absorber options (for out-of-chassis testing) available.

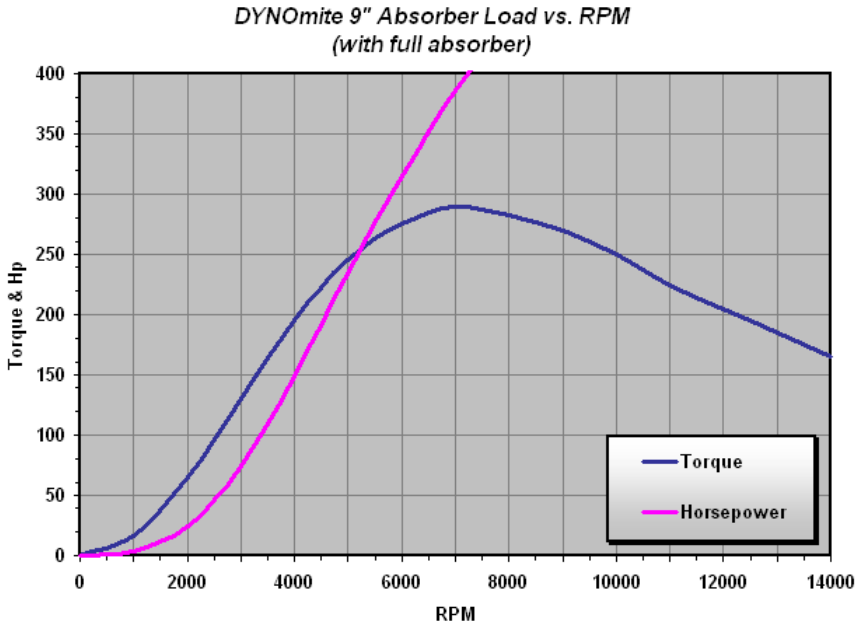

906.482.7535 www.glsv.com